U-CHANNEL

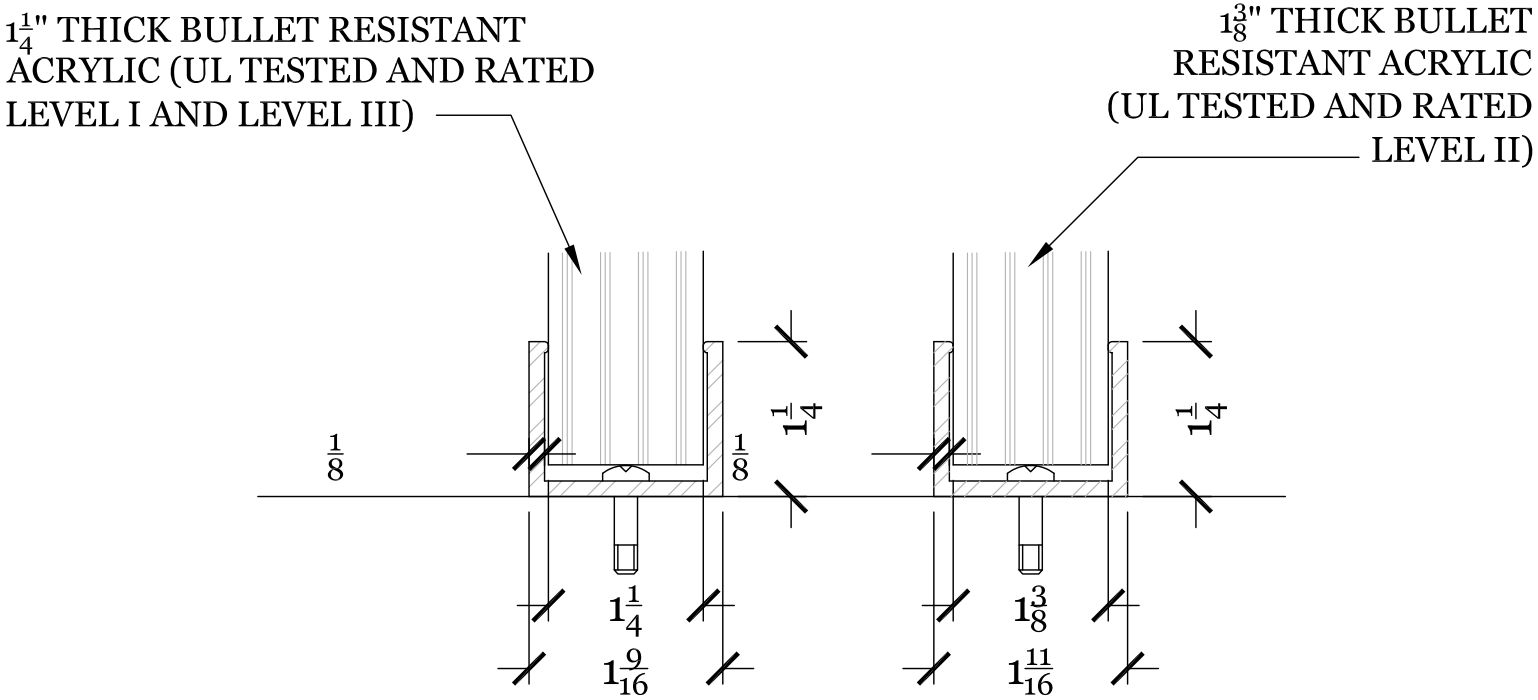

TWO PIECE

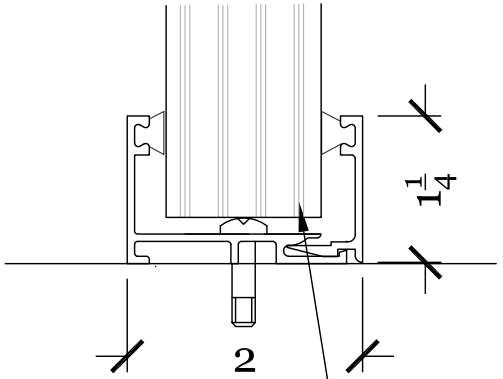

CHANNEL WILL ACCEPT LEVEL I, II OR III GLAZING

44-250

BR RATED CHANNEL

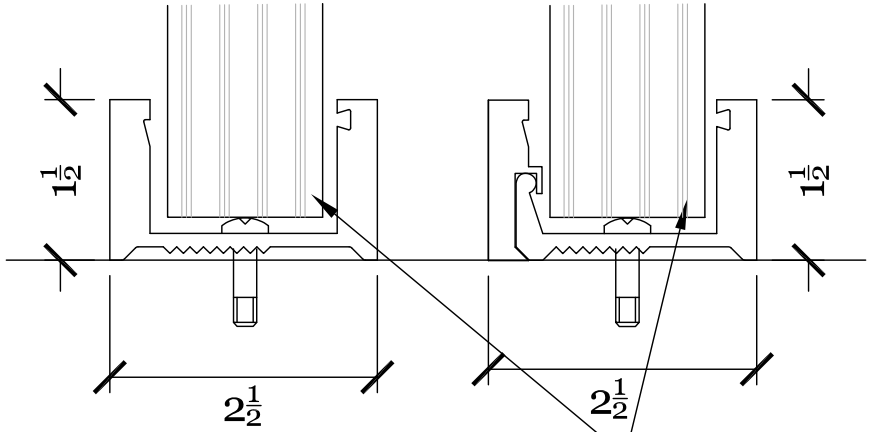

CHANNEL WILL ACCEPT LEVEL I, II OR III GLAZING

Project Name:

GLAZING CHANNELS

TYPICAL DETAILS

Total Security Solutions
170 National Park Drive
Fowlerville, Michigan 48836
517.223.7807 Fax: 517.223.0805

Issue Date:

Revisions

No.	Date	Description

These drawings and all information hereon are of a confidential nature and remain the property of TOTAL SECURITY SOLUTIONS Any use or reproduction of these drawings for any purpose, except by written permission of TOTAL SECURITY SOLUTIONS is strictly prohibited.

Designed By:

Drawn By:

Checked By:

Sheet Title:

SECTIONS

Sheet Number:

A1