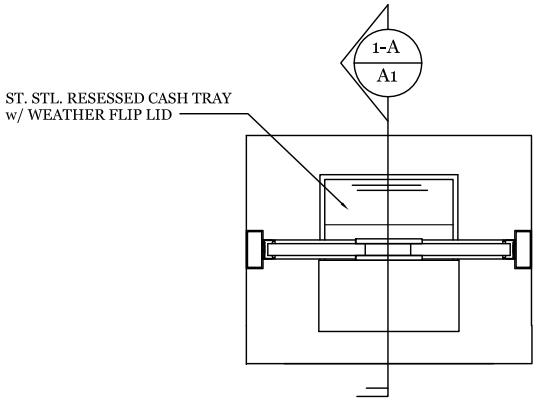

1 / A1 PLAN

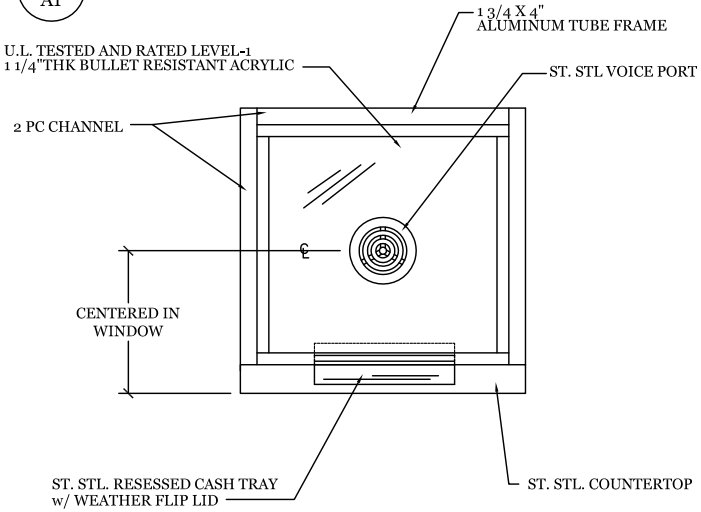

A / A1 ELEVATION

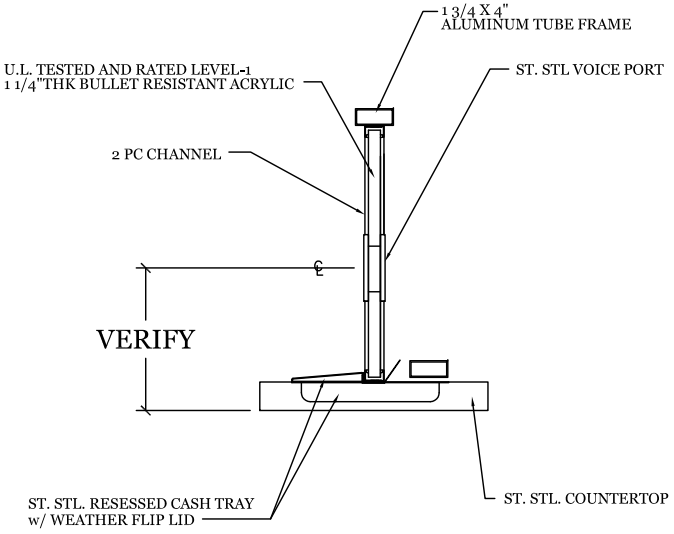

1-A / A1 SECTION

Project Name:

EXTERIOR TRANSACTION WINDOW

TYPICAL DETAILS

Total Security Solutions
170 National Park Drive
Fowlerville, Michigan 48836
517.223.7807 Fax: 517.223.0805

Issue Date:

Revisions

No.	Date	Description

These drawings and all information hereon are of a confidential nature and remain the property of TOTAL SECURITY SOLUTIONS
Any use or reproduction of these drawings for any purpose, except by written permission of TOTAL SECURITY SOLUTIONS is strictly prohibited.

Designed By:

Drawn By:

Checked By:

Sheet Title:
ELEVATION

Sheet Number:
A1