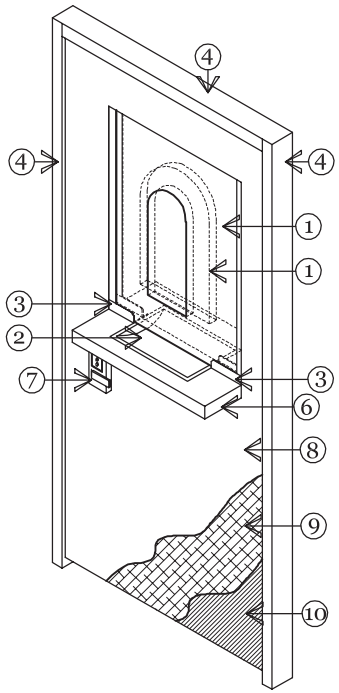

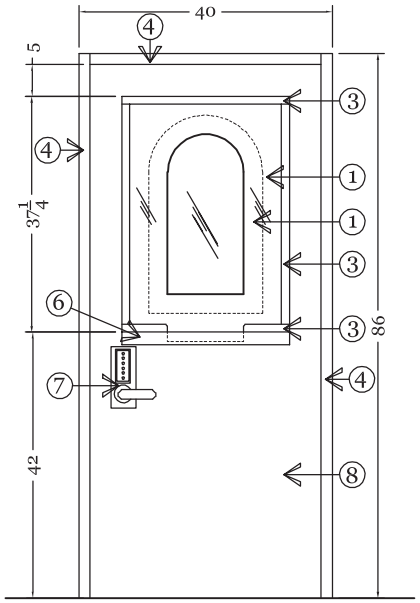

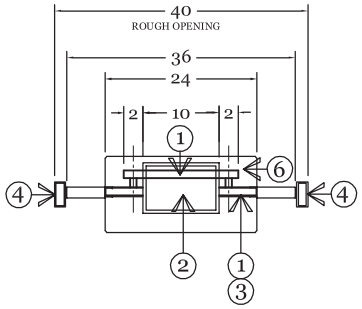

ARCH STYLE

DRAWING NOTES:

1. BULLET RESISTANT ACRYLIC OR ACRYLIC/POLYCARBONATE COMPOSITE. AVAILABLE IN PROTECTION LEVELS 1,2,3.
2. 18 GUAGE BRUSHED STAINLESS STEEL RECESSED DEAL TRAYS. STANDARD SIZE 10w x 8d FOR ARCH. 8w x 8d FOR BAFFLE.
3. EXTRUDED ALUMINUM CHANNEL. SIZED TO MATCH THE LEVEL OF ACRYLIC PROTECTION. STANDARD COLORS: ARCHITECTURAL BRONZE AND CLEAR ANODIZED ALUMINUM. CUSTOM COLORS ARE AVAILABLE.
4. ALUMINUM TUBE FRAME, SIZED BASED ON WIDTH AND HEIGHT OF ASSEMBLED UNIT. TUBE SIZE IS 1- $\frac{3}{4}$ x 4 OR 1 x 4.
5. ACRYLIC DOWEL SPACERS.
6. PLASTIC LAMINATE COUNTER TOP. WIDTH SIZED TO MATCH OPENING WIDTH. MAXIMUM DEPTH IS 18", MINIMUM DEPTH IS 12". COUNTER TOP IS 1- $\frac{1}{2}$ THICK.
7. STANDARD LOCKSET SIMPLEX UNICAN PUSH BUTTON OR SCHLAGE STOREROOM FUNCTION.
8. PLASTIC LAMINATE OR PAINTABLE WOOD VENEER FINISH.
9. UL RATED BALLISTIC RESISTANT FIBERGLASS, AVAILABLE IN PROTECTION LEVEL 1,2,3.
10. WOOD DOOR BLANK.

Standard Door Notes:

Finished Opening:	40 x 86
Jamb Size:	39-$\frac{3}{4}$ x 85-$\frac{3}{4}$"
Door Size:	35-$\frac{1}{2}$ x 83-$\frac{1}{8}$

Level 1,2,3
Finish: Paint Grade Wood or Plastic Laminate
Lockset: Simplex Unican or Schlage Storeroom
Door Closer: International 1581
Anti-Jimmy: Included on out swing doors

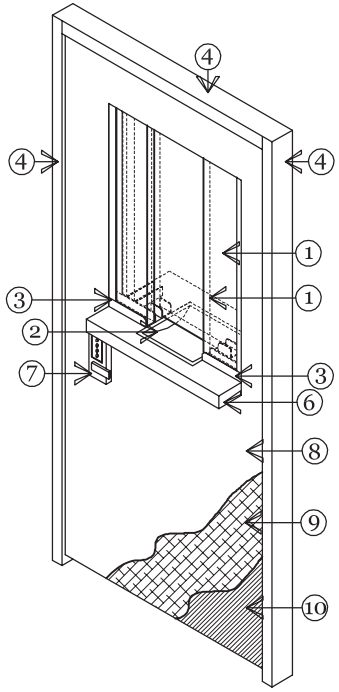

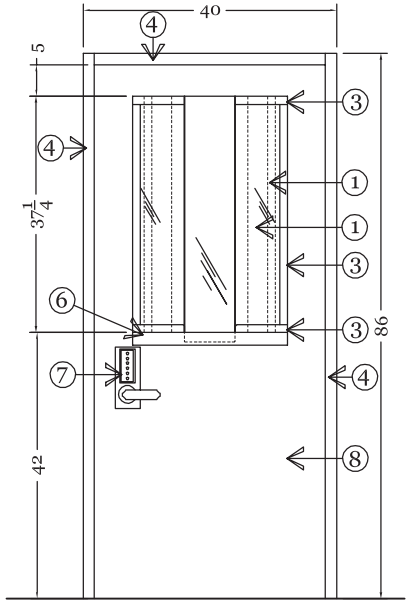

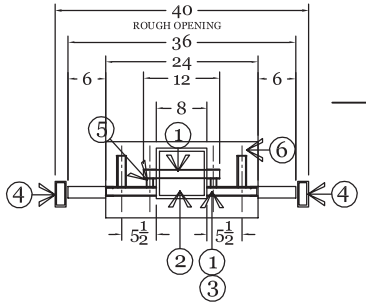

BAFFLE STYLE

Project Name:

ARCH WINDOW SYSTEM

TYPICAL DETAILS
COUNTER W/ RISERS

Total Security Solutions
170 National Park
Fowlerville, MI 48836

Issue Date:

Revisions

No.	Date	Description

These drawings and all information hereon are of a confidential nature and remain the property of TOTAL SECURITY SOLUTIONS. Any use or reproduction of these drawings for any purpose, except by written permission of TOTAL SECURITY SOLUTIONS is strictly prohibited.

Project Number: Drawn By: BDF
Designed By: Checked By:
Sheet Title:
Sheet Number: A1